INSTRUCTIONS

Hornady®
Accurate. Deadly. Dependable.

Lock-N-Load®
Classic™ Pro
Metallic Press

Item No. 085201

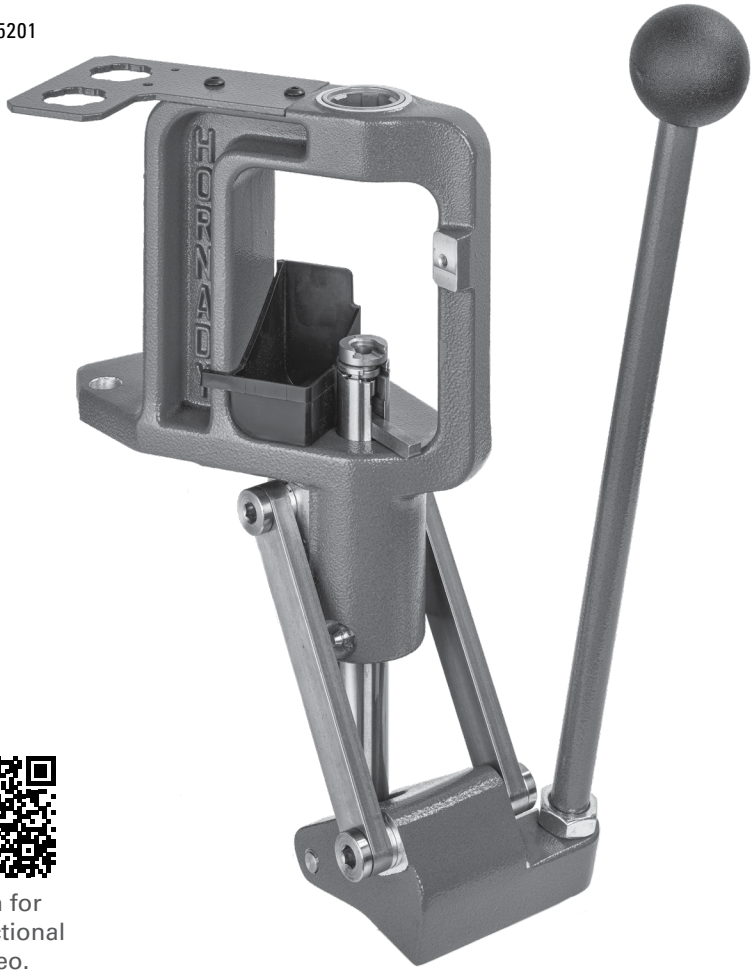

Scan for instructional video.

PARTS LIST

Part	Part No.	Quantity	Description
1	190220	1	Classic Pro Frame
2	190221	1	Classic Toggle
3	190222	1	Classic Pro Ram
4	190223	1	Classic Pro Toggle Pin
5	190224	2	C-Clip for 5/16" Shaft 0.025"
6	190225	2	Classic Pro Toggle Bushing
7	190228C	4	Classic Pro Linkage Bushing
8	392719	2	Black Oxide Bolt #10-32 x 3/8 BHCS
9	392301	1	LNL Bushing, Female
10	480090	1	Primer Catcher
11	390657R	1	Handle, 366, LNL Classic, LNL AP
12	480003	1	Ball Handle Plastic
13	390071	2	Machined Classic Link
14	380053	1	Shell Holder Ram Spring
15	390661	1	Pin, Spring, 3/32 x 5/8
16	390027	1	Nut Jam 5/8-16
17	398422	1	Grease Fitting 1/4-28
18	190213	2	Primer Arm
19	390006	1	Cup Seater Primer (Large)*
20	390005	1	Primer Arm Cup (Small)
21	390034	1	Punch Seater Primer (Small)*
22	390035	1	Punch Seater Primer (Large)*
23	390007	2	Spring Primer Cup
24	390653	1	1/8" Allen Wrench Short Arm
25	390656	1	3/32 Allen Wrench Short Arm
26	190229	2	Classic Pro Yoke Pin Bolt
27	190230	2	Classic Pro Yoke Pin Nut
28	190421	1	Small Primer Cup Pro
29	190422	1	Large Primer Cup Pro
30	190226	1	Classic Pro Die Caddy

Lock-N-Load® Die Bushing

Part No. 392302

O – Ring

Part No. 392303

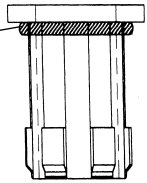

Lock-N-Load® Press Bushing

Part No. 392301

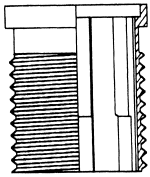

Lock-N-Load® Die Bushings

Lock-N-Load® die bushings are available in convenient packs of two, three, or ten. Put a Lock-N-Load® die bushing on all of your favorite dies for maximum reloading efficiency.

Lock-N-Load® Die Bushings (2-pack) No. 044094

Lock-N-Load® Die Bushings (3-pack) No. 044093

Lock-N-Load® Die Bushings (10-pack) No. 044096

EXPLODED VIEW

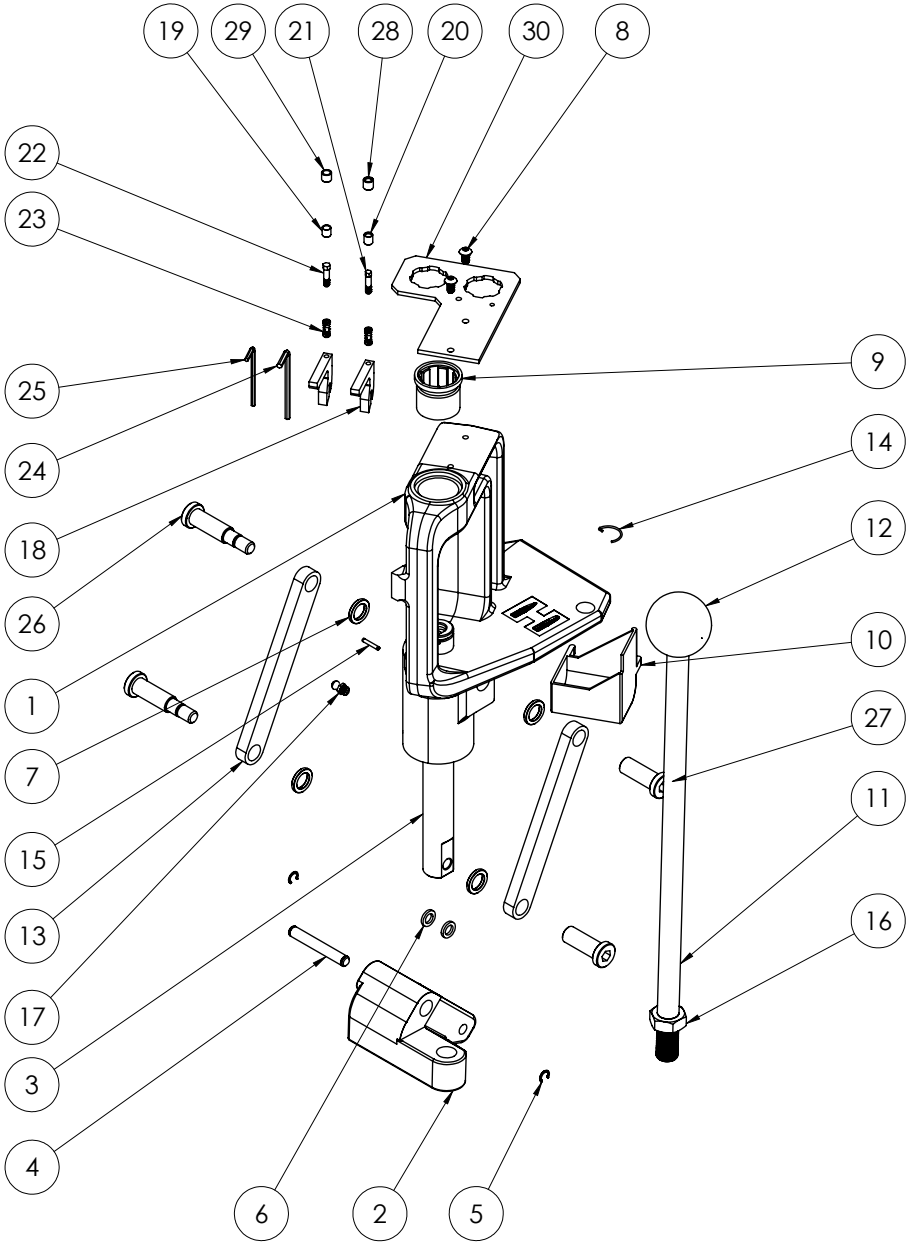

INSTRUCTIONS

1 Mount your new press securely to a solid level bench.

Position the press on the bench with the mounting holes far enough back to provide firm support and still allow clearance for the toggle. See mounting diagram at the back of this manual.

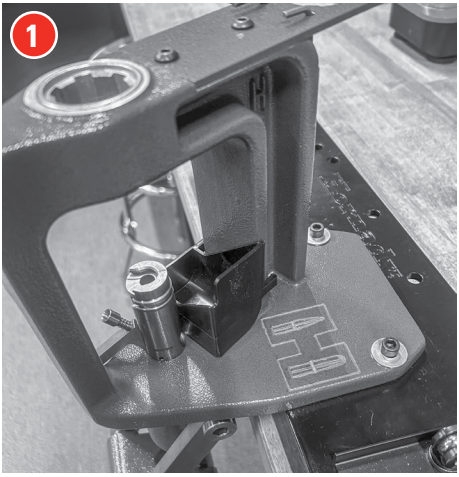

2 Select a shell holder for the cases you will be reloading.

Insert the shell holder into the slot at the top of the ram. It is retained in the recess in the top of the ram by a detent spring.

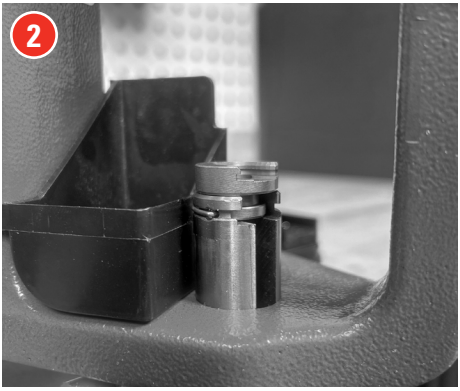

3 Insert and adjust the sizing die.

Take note, these presses slightly cam over to allow you to exert maximum pressure with at the top of the stroke.

NOTE: *Refer to the "How Lock-N-Load Works" section in this manual for installing and using Lock-N-Load Bushings.*

NOTE: *Refer to Die Setup Instructions in the Hornady Die Box.*

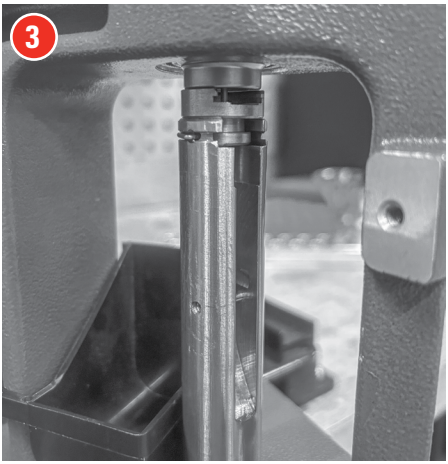

4 Insert primer arm into ram.

Screw the proper seater punch/cup for the type of primer you are using into the arm before placing in ram.

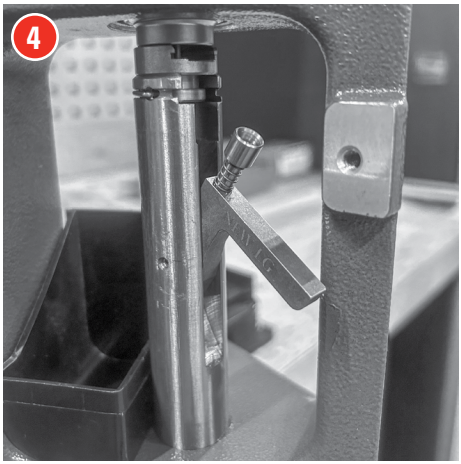

5 Clean, inspect and lubricate all cases before resizing.

Using a Hornady® One Shot® Case Lube, it is easy to lubricate the body portion of the bottle neck cases. A minimum of lubricant should be used on the neck portion since trapped lubricant may cause the shoulder to buckle. Very little or no lubricant may easily result in a stuck case.

6 Place a lubricated case in the shell holder and pull the operating handle.

As the ram moves upward, you will see the PPS primer arm pivot forward to allow the decapped primer to deflect off the arm into the primer catcher. As the primer arm pivots, it moves into position to pick up a new primer. If you are not using the automatic primer feed, a primer must be inserted by hand at the top of the ram stroke.

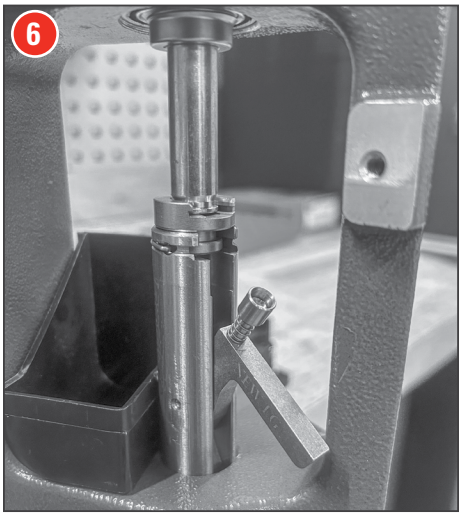

7 With a primer in the cup, return the handle to the rest position.

As the ram moves downward, the PPS primer arm pivots back into position under the decapped case and is held in position by the ram and the frame casting. As the ram continues downward, the case is brought down over the primer cup and the primer is seated. Use care at this stage to feel the primer "seat" correctly without being crushed. Release pressure on the operating handle and raise it slightly to allow removal of the primed case. Then insert another case and repeat the operation.

If you are using the automatic primer feed, it will be necessary to adjust the feed body. The ram should be at the top of the stroke. Adjust the primer feed body so the primer retainer spring is deflected by the primer cup (on the primer arm) far enough to allow a primer to drop (see APF instruction). Do not overtighten the adjusting screw. It should be tight enough to hold the unit in place, but still allow the body to move to prevent a primer from being caught or crushed.

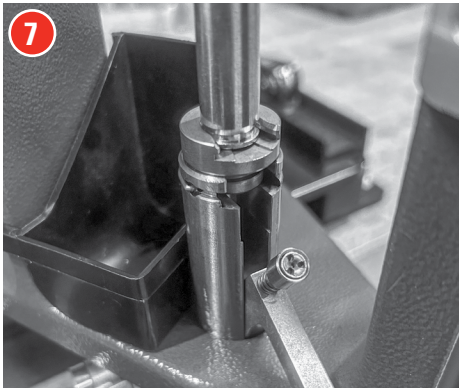

WARNING:
PRIMERS WILL EXPLODE!

1. Keep away from children.
2. Do not smoke near primers.
3. Primers are designed to explode and will do so when subjected to heat or percussion.
4. Always wear safety glasses when handling primers.
5. **DO NOT** force primers. All primers in the near vicinity of an exploding primer will usually also detonate violently. Do not store or handle primers in bulk.
6. For identification and safety, keep primers in their original protective packaging.
7. An absolute minimum of primers should be kept at the loading operation. Open only one package tray at a time.
8. Do not decap live primers.
9. Never attempt to seat, or reseat, a primer in a loaded round.

8 Check case length and trim, if needed.

Always chamfer inside and debur outside of case mouth with Hornady Chamfering and Deburring tool, and wipe case free of all lubricant with clean dry cloth.

Refer to the Handbook for trim lengths.

9 Charge prepared cases with selected powder.

Weigh using either a scale, or powder measure in conjunction with a scale. Refer to the *Hornady Handbook of Cartridge Reloading* or any other reputable source for proper loads.

10 Replace the sizing die with the seating die according to instructions furnished with the die set.

Remove primer arm by running the ram up half a stroke and slide primer arm up and out of the ram slot. The opening in your press is large enough to easily handle any modern cartridge with no difficulty. *(Refer to Die Setup Instructions in the Hornady Die Box)*

Note: *Remove primer tube to help with the process.*

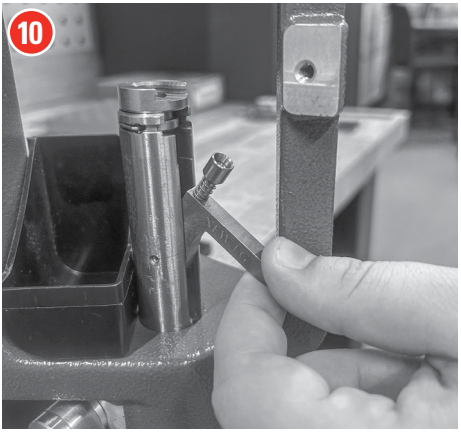

11 Set bullet in the mouth of the case and run to the top of the stroke.

Measure the overall length to make sure ammo will chamber. Repeat the process.

Note: *Avoid overfilling the grease zerk and only use Hornady grease. The die caddy is pre-mounted and ready for storing wrenches, dies, or a powder drop.*

HOW LOCK-N-LOAD® WORKS

The Lock-N-Load® Reloading System is Hornady's unique bushing system that lets you change dies with a simple flick of the wrist. With Lock-N-Load® technology in your reloading press, you can stop loading, change dies, and start loading another caliber in SECONDS. If you load more than one caliber, Lock-N-Load® will dramatically speed up your reloading efforts.

This unique technology is featured on our Lock-N-Load® Classic,™ Lock-N-Load® Classic™ Pro and Lock-N-Load® AP™ (Auto Progressive) reloading presses.

The Hornady Lock-N-Load® system is as easy as 1-2-3:

01 Insert the Lock-N-Load® die bushing into the press bushing and lock it into place with a twist. The six locking lugs on the die and press bushings will hold it securely in position.

02 Insert your standard die into the Lock-N-Load® Bushing.

03 Adjust the die to the proper position and lock your setting into place with Hornady's unique Sure-Loc™ Lock Ring.

To change calibers, simply twist the die counterclockwise, remove die and insert your next preset Lock-N-Load® die and bushing. Because they remain locked in their Lock-N-Load® Bushings, your dies will remain exactly as you set them. The positive locking action of the Lock-N-Load® Bushings holds the dies in rock solid, perfect alignment. Once you try Lock-N-Load® from Hornady, you'll NEVER want to go back to your old system.

SIX LOCKING LUGS

The combination of the six lugs and the close tolerance of the tooling firmly grip the die bushing in place in the press for maximum rigidity and accuracy in reloading.

RUBBER O-RING ON DIE BUSHING

The O-ring on our die bushings gives you a better feel when the die is inserted and holds the die tight against the locking lugs to prevent accidental loosening.

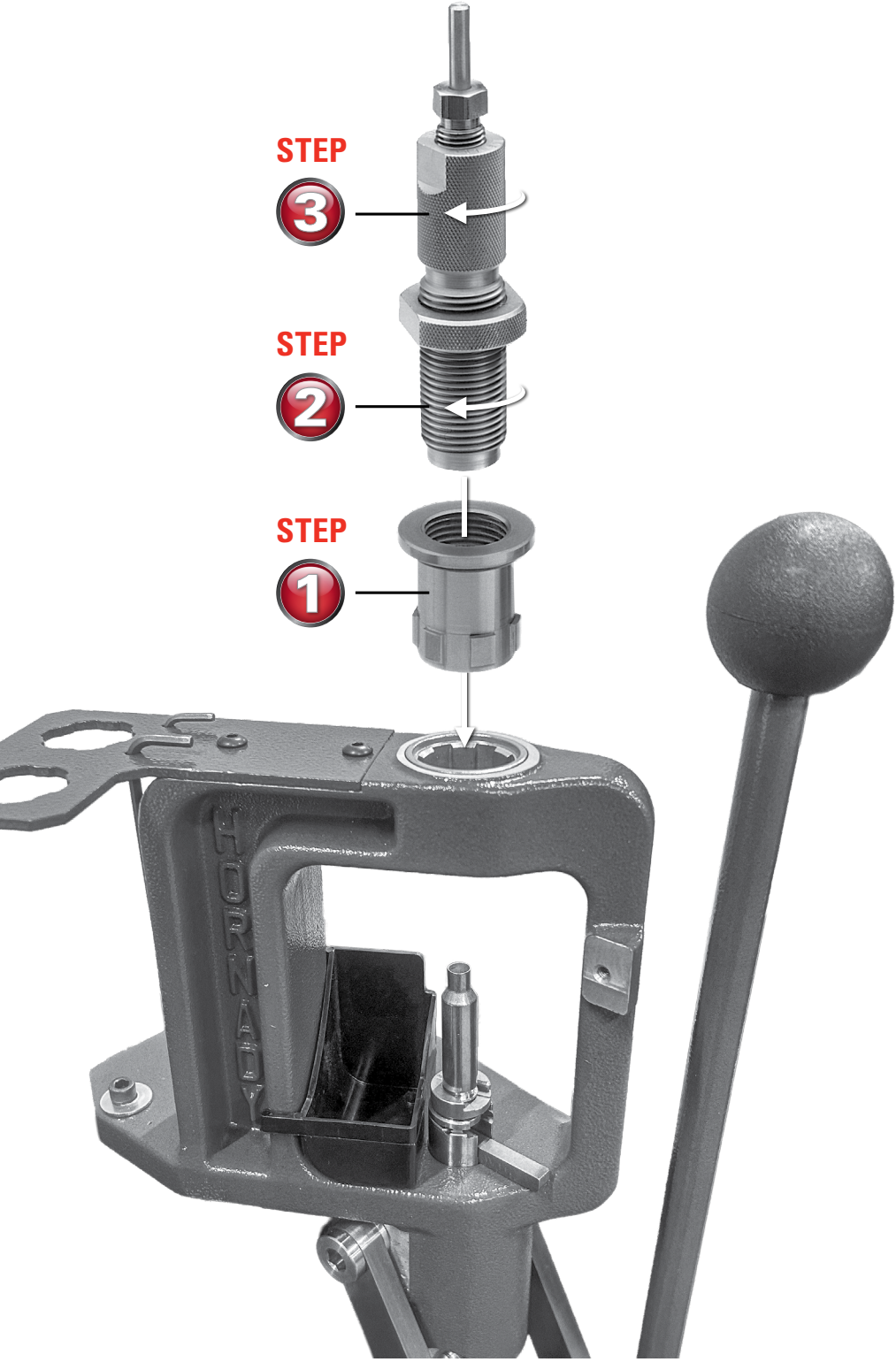
STEP
3
STEP
2
STEP
1
SHORNAGEY

WARRANTY

All Hornady reloading tools and accessories are warrantied against material defects and workmanship.

Hornady electronic components are covered by a one-year warranty from the date of purchase.

This warranty is void if the product (1) has been damaged by accident or unreasonable use, neglect, improper service or other causes not arising out of defects in material or workmanship; or (2) has been altered or repairs have been made or attempted by other than authorized factory personnel; (3) is used commercially; or (4) has been altered or defaced in any way.

This warranty supersedes all other warranties for Hornady products either written or oral. No other warranty is expressed or implied.

PRODUCT REGISTRATION AND SERVICE

You must register your product to obtain Warranty Service. Complete the registration form at **hornady.com/warranties.**

Scan to register your product to receive the full benefit of its warranty.

TO RECEIVE WARRANTY SERVICE

To report a warranty claim, call Hornady® at 800-338-3220 to request a return authorization number. Returns will not be accepted without prior return authorization by Hornady.®

POST-WARRANTY SERVICE INFORMATION

For issues concerning service after the Limited Warranty expires, contact Hornady® at 800-338-3220.

PRODUCT SERIAL NUMBER AND REFERENCE INFORMATION

You must register your product in order to obtain warranty service. In the event you should need service for your product, please note the following information:

Serial Number _____

Date Purchased _____

Retailer _____

Mounting Template

Complete warranty page before using this template.

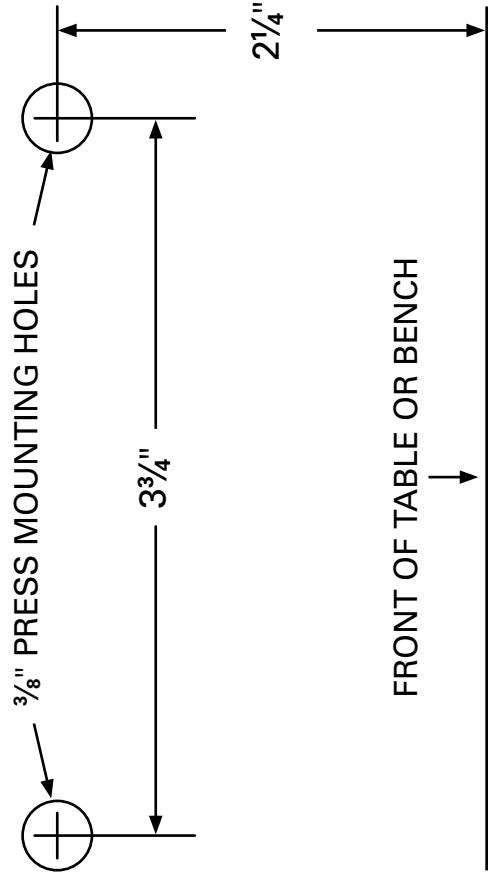

Hornady®
Accurate. Deadly. Dependable.®

P.O. Box 1848, Grand Island, NE 68802-1848
hornady.com/contact